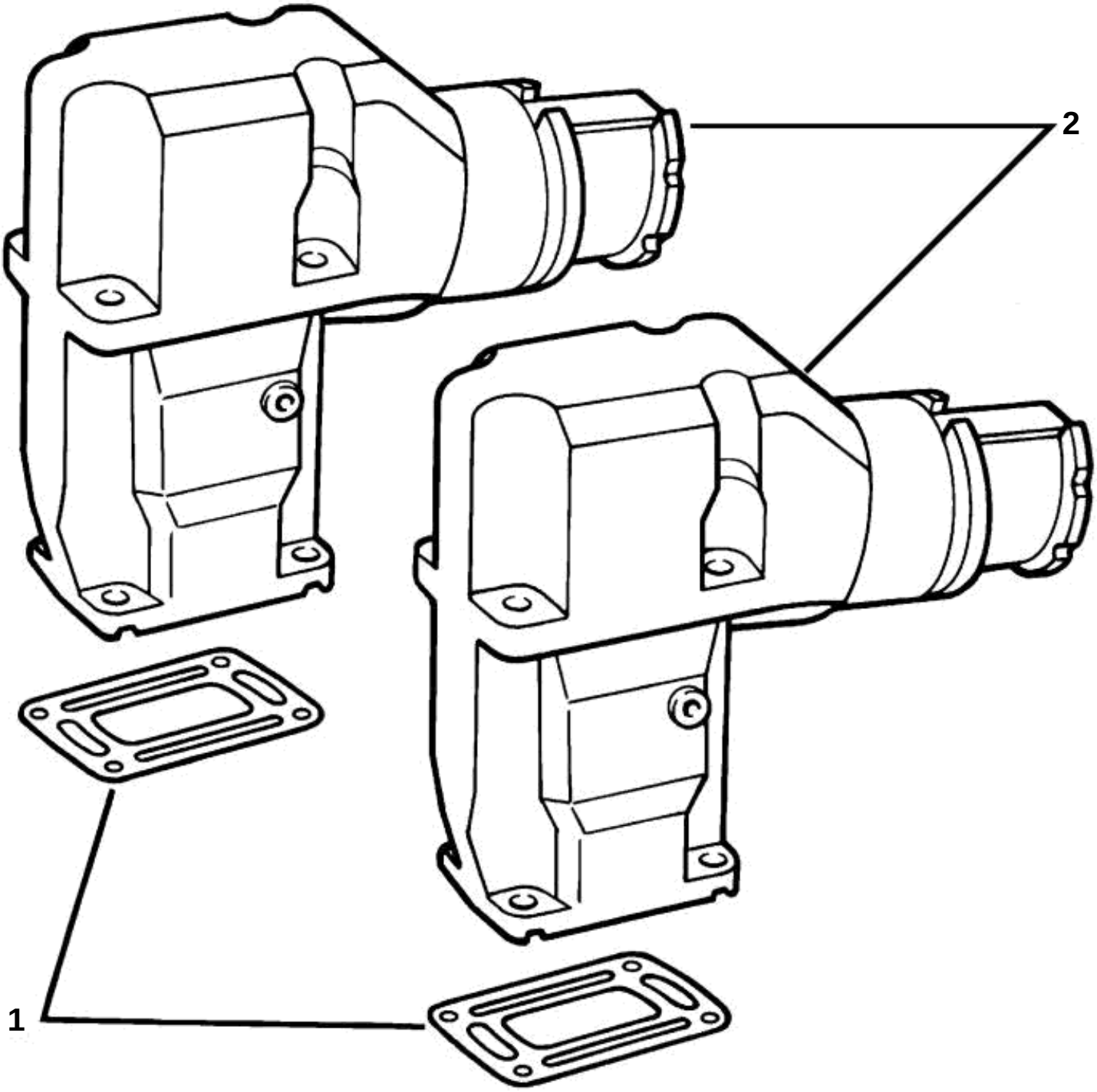
2
1

# EXHAUST RISER KIT

| REF | PART NO. | QTY | DESCRIPTION |
|---|---|---|---|
| | 3856259 | 1 | Exhaust riser |
| 1 | 3850496 | 2 | · Gasket |
| 2 | 3856484 | 2 | · Exhaust riser |